3 wire Serial Comunication Reference Circuit

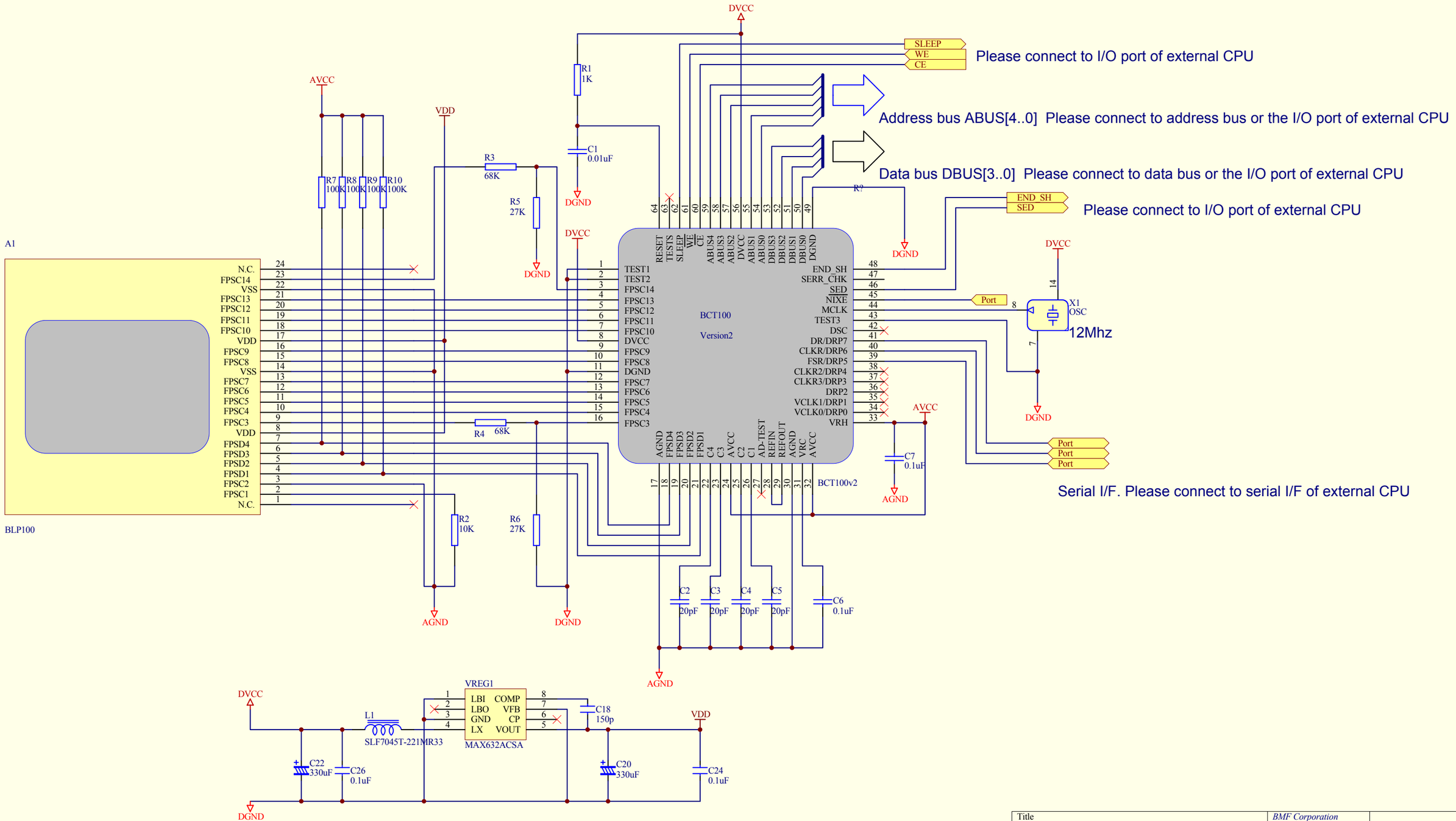

Title			BMF Corporation
BCT100 3-wire Serial Port			*11-2 Minamikurokawa Asouku , Kawasaki Kanagawa Japan*
Size: B	Number:	Revision: 1.1.0.0	
File:		Date: 16-Oct-2002 Time:	Sheet 1 of 1

BMF